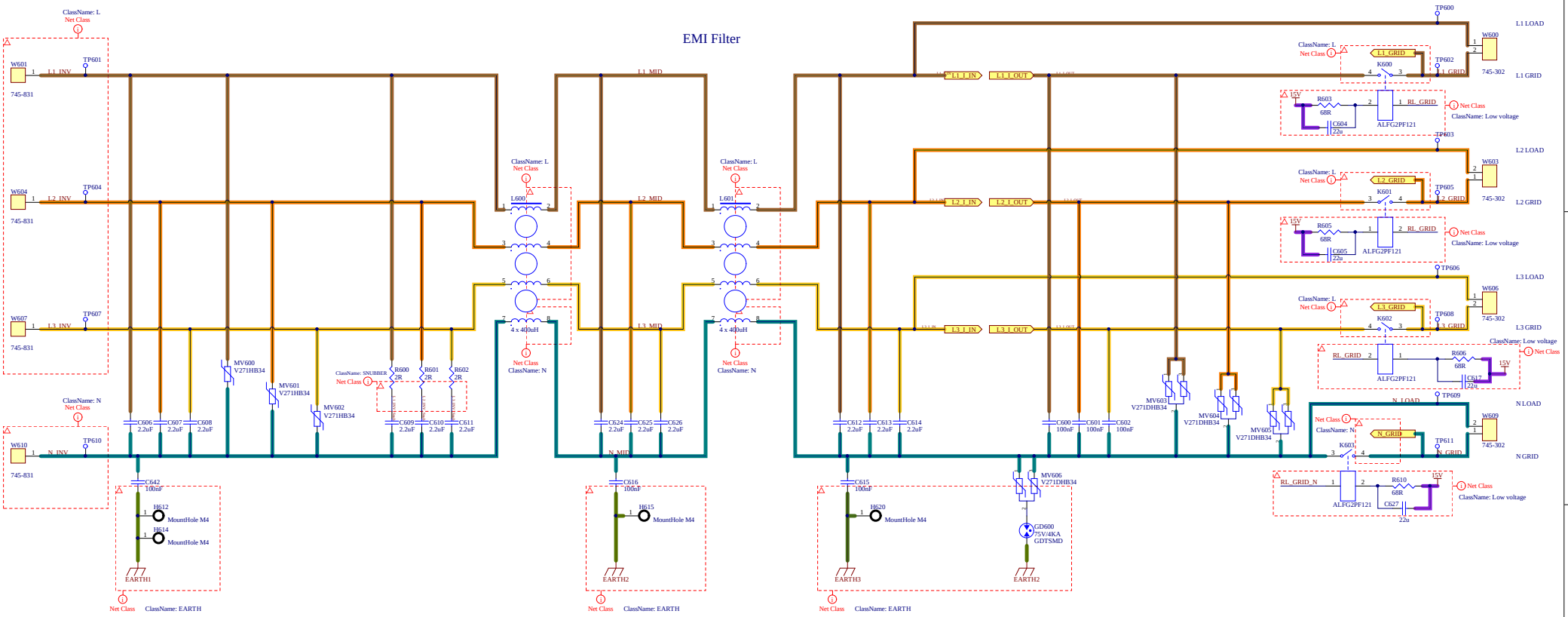

Seperate earth terminals created to ensure direct local chassis connection to commonmode filtering capacitors

All Net class low voltage is referenced to PGND which is DCLink- (UDC_N) max. -415Vdc!

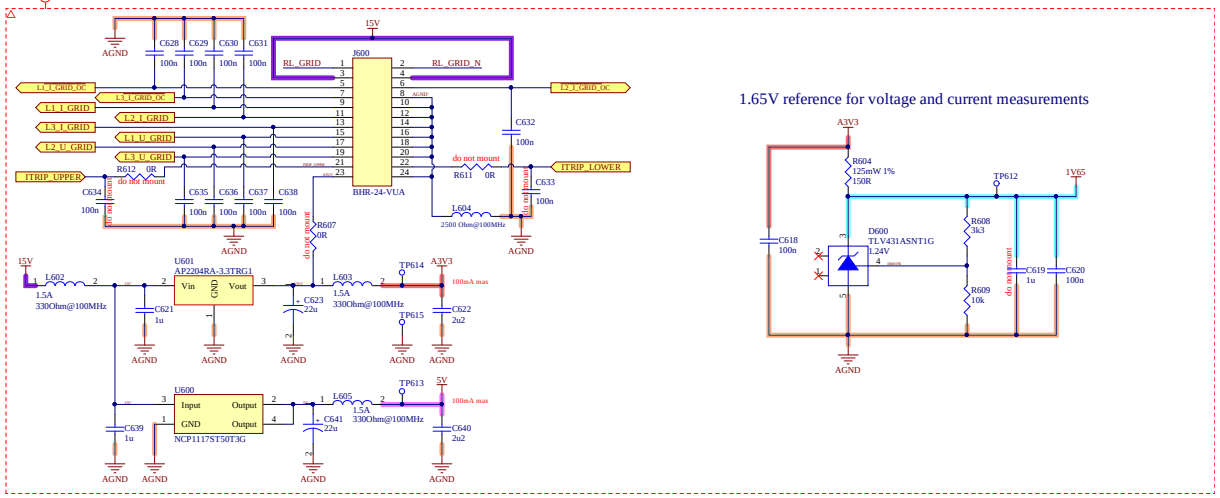

1.65V reference for voltage and current measurements

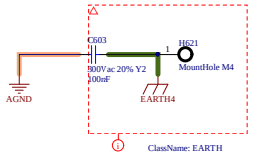

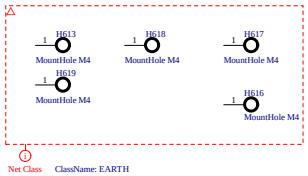

FID1 Fiducial FID2 Fiducial FID3 Fiducial FID4 Fiducial FID5 Fiducial FID6 Fiducial

- CONFIDENTIAL -
THIS DRAWING CONTAINS PROPRIETARY INFORMATION WHICH MAY NOT BE DISCLOSED TO OTHERS FOR ANY PURPOSE WHATSOEVER OR USED FOR MANUFACTURING PURPOSES WITHOUT PRIOR WRITTEN PERMISSION FROM THE FUTURE ELECTRONICS CORPORATION.

FUTURE ELECTRONICS
AEG Engineering Tomorrow's Ideas
Future Electronics - System Design Centre EMEA
Future House
The Glanty, Egham, Surrey,United Kingdom
TW20 9AH

Project Name	Inresol Grid Inverter EMI Rev 3B
Title	Main
Designed by	Morten Andersen
Drawn by	Morten Andersen
Checked by	David Woodcock
Approved by	David Woodcock
Size	A2
Dwg No.	FEN-Prj_No-SCH-R3B
Rev	3B
Date	2017-12-20
Sheet	1 of 2
Variant:	[No Variations]

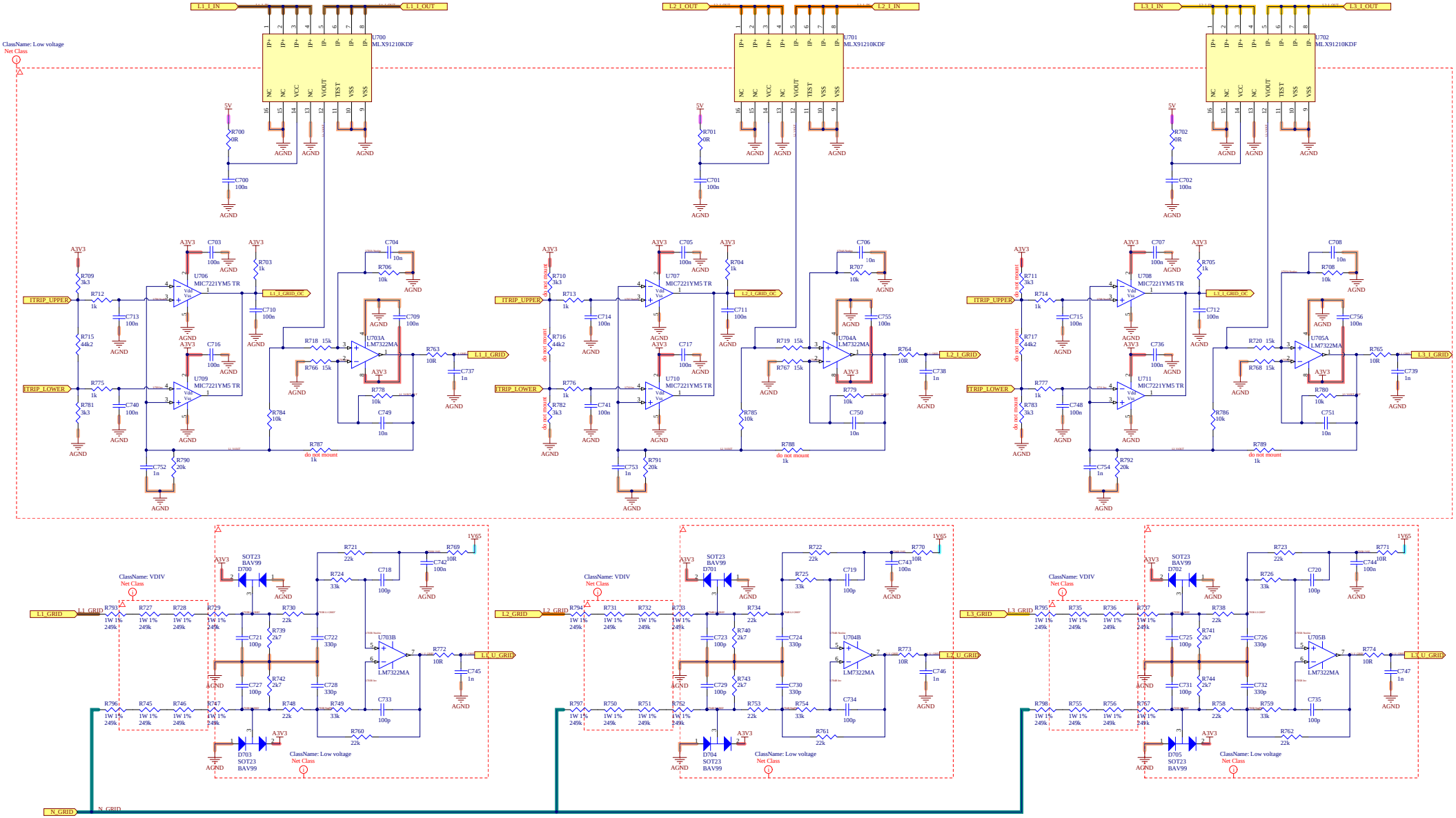

All Net class low voltage is referenced to PGND which is DCLink- (UDC_N) max. -415Vdc!

- CONFIDENTIAL -
THIS DRAWING CONTAINS PROPRIETARY INFORMATION WHICH MAY NOT BE DISCLOSED TO OTHERS FOR ANY PURPOSE WHATSOEVER OR USED FOR MANUFACTURING PURPOSES WITHOUT PRIOR WRITTEN PERMISSION FROM THE FUTURE ELECTRONICS CORPORATION.

FUTURE ELECTRONICS — AEG Engineering Tomorrow's Ideas

Future Electronics - System Design Centre EMEA
Future House
The Glanty, Egham, Surrey,United Kingdom
TW20 9AH

Project Name: Inresol Grid Inverter EMI Rev 3B

Title: Grid_UI

Designed by: Morten Andersen	Drawn by: Morten Andersen	Size: A2	Dwg No.: FEN-Prj_No-SCH-R3B	Rev: 3B
Checked by: David Woodcock	Approved by: David Woodcock	Date: 2017-12-20	Sheet: 2 of 2	Variant: [No Variations]